CARTER PROCESS CONTROL GmbH

CPC
Carter Process Control GmbH

UPGRADE

Upgrade Solutions Equals Improved Performance

Wrong Material selection

Incorrect number of pressure reduction stages

When the wrong material selection is made or when the supplied trim is not produced correctly to the process conditions CPC can design and engineer the correct solution for the application increasing uptime and reducing maintenance costs.

Get the right Control Valve Trim from CPC with an upgraded solution

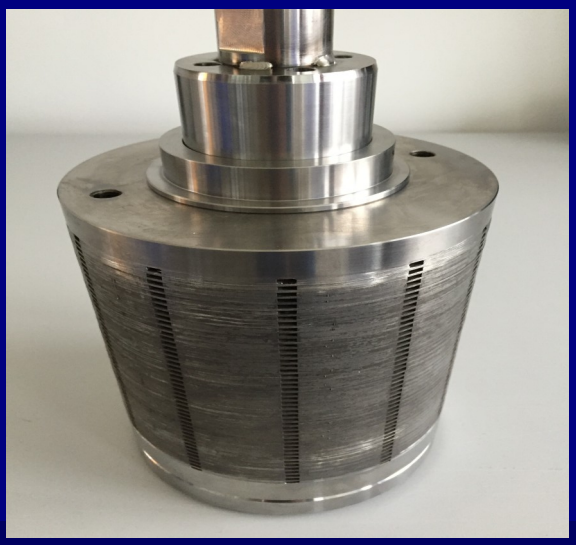

CARTER PROCESS CONTROL GmbH

CPC
Carter Process Control GmbH

UPGRADE

Power Station Example

CPC were approached by a UK Power Station to help solve an ongoing repeat failure of a number of Feedwater Control Valves (HP, MP & IP)

After technical evaluation of the operating conditions and the current OEM valve we identified and presented a number of improvements to the customer.

It was clear that the OEM technology for this application was not up to the job so CPC engineered a trim solution that would fit directly into the existing OEM valve with no alterations to the body or actuator assembly.

CPC's design included a number of improvements including relocating the balance seal off the plug and into the cage plus the addition of labyrinth grooves on the plug to help reduce the velocity at the seat area.

ENGINEERED TO SOLVE THE PROBLEM

- Piston rings failing on the plug
- Cavitation on the seat face
- CPC Design putting a Balance seal in the cage replacing the piston rings plus adding labyrinth grooves on the plug to reduce cavitation.

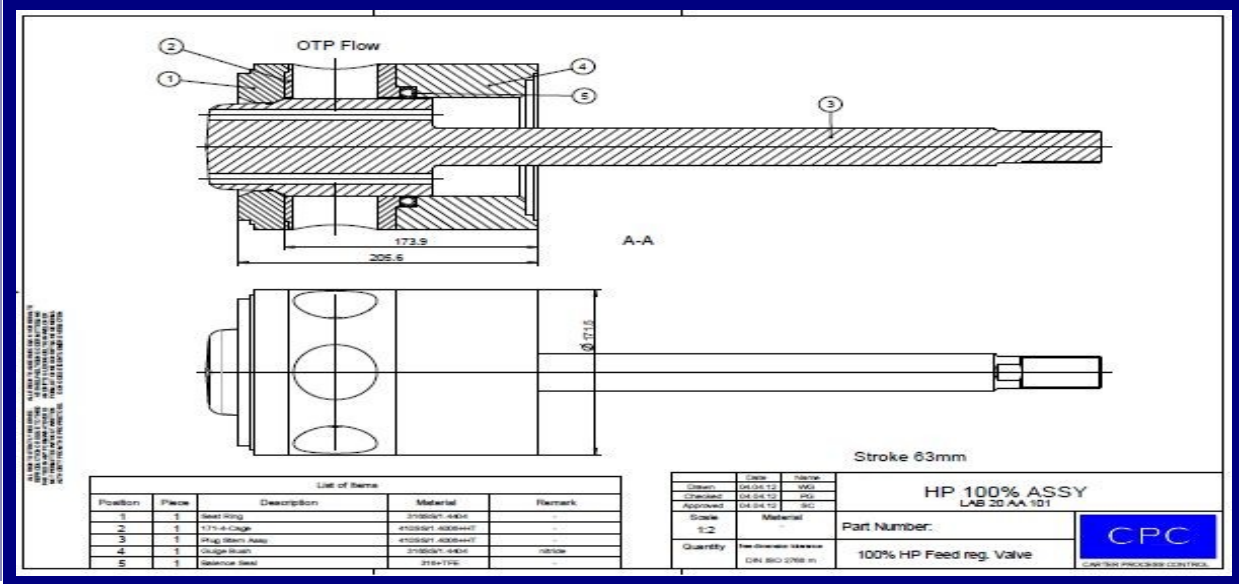

CARTER PROCESS CONTROL GmbH

CPC
Carter Process Control GmbH

UPGRADE

Oil & Gas Example

CPC were asked by an Oil & Gas operator in Australia to solve a big problem they were experiencing on an unmanned platform. The problem was with a very high pressure drop low flow valve that was constantly failing due to poor design.

CPC quickly identified the root cause for the failure and presented the solution to the end customer. The customer involved a varied number of technical decision makers who all agreed the proposed solution was the right one to solve the problem.

CPC were given the order to manufacture as quickly as possible the solution so that the platform could get back to full production again. CPC completed the complete solution in under 4 weeks.

OEM TRIM (Continually Failing/Poor Design)

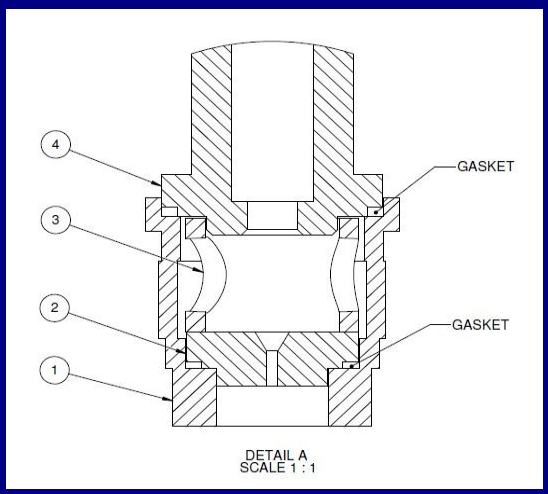

CPC's Engineered Solution To Fix The Problem

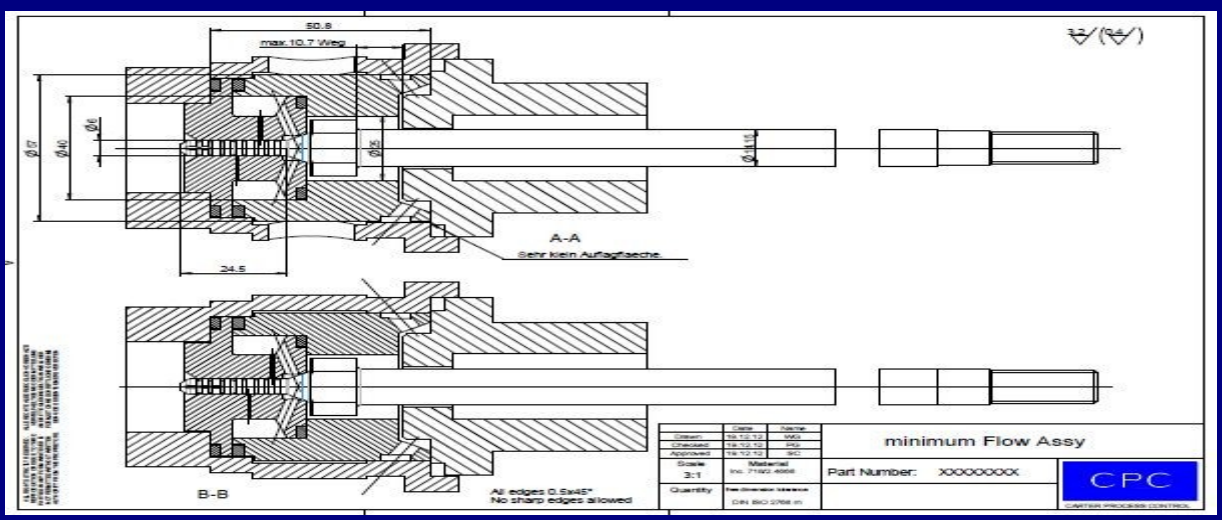

CARTER PROCESS CONTROL GmbH

CPC
Carter Process Control GmbH

UPGRADE

Even if the material selection is correct and the trim from the OEM is the best they can offer CPC can still make significant improvements to extend the service life of the trim

CPC
Carter Process Control GmbH

CARTER PROCESS CONTROL GMBH
Europaring F15
2345
Brunn am Gebirge
Austria

Tel: +43 123 60040
Fax: +43 123 600401
e-mail: sales@carterprocess.com
http://www.carterprocess.com

INVESTIGATION REPORT

Customer:	TUAS/Alstom
CPC Representative:	CVI Services & Supply Pte Ltd
Control Valve Description:	3" x 3" CCI Angle Feedwater Control Valve
Tag No:	Various
Example Serial No:	102311AT-01
Date of Preparation:	15.05.2015
CPC Quotation:	231269-741

Report compiled by: Steven Carter – Managing Director
Paul Graussam – Operations & Technical Director

CPC can examine the application in detail and prepare a full technical investigation report for and propose the optimum solution for the customer.

CPC Solves The Problem Again!!

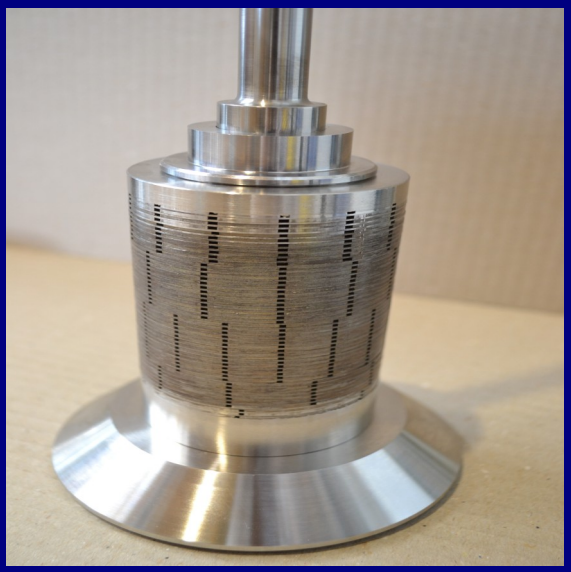

PERFEKTASTRASSE 87,
TOP 7 & 9
VIENNA
AUSTRIA

TEL: +43 (0) 1 2126206

CERTIFICATE

TÜV AUSTRIA

Management system as per
EN ISO 9001:2015

CPC
Carter Process Control GmbH
Perfektgasse 28/5
A-2372 Giesshuebl

design, repair, modify, replicate, re-engineer, manufacture and supply of control valves, control valve spare parts, actuators and associated accessories

CERTIFICATE

TÜV AUSTRIA

Management system as per
EN ISO 14001:2015

CPC
Carter Process Control GmbH
Perfektgasse 28/5
A-2372 Giesshuebl

design, repair, modify, replicate, re-engineer, manufacture and supply of control valves, control valve spare parts, actuators and associated accessories